Cod. 57090000

905 x 460 x 800 mm

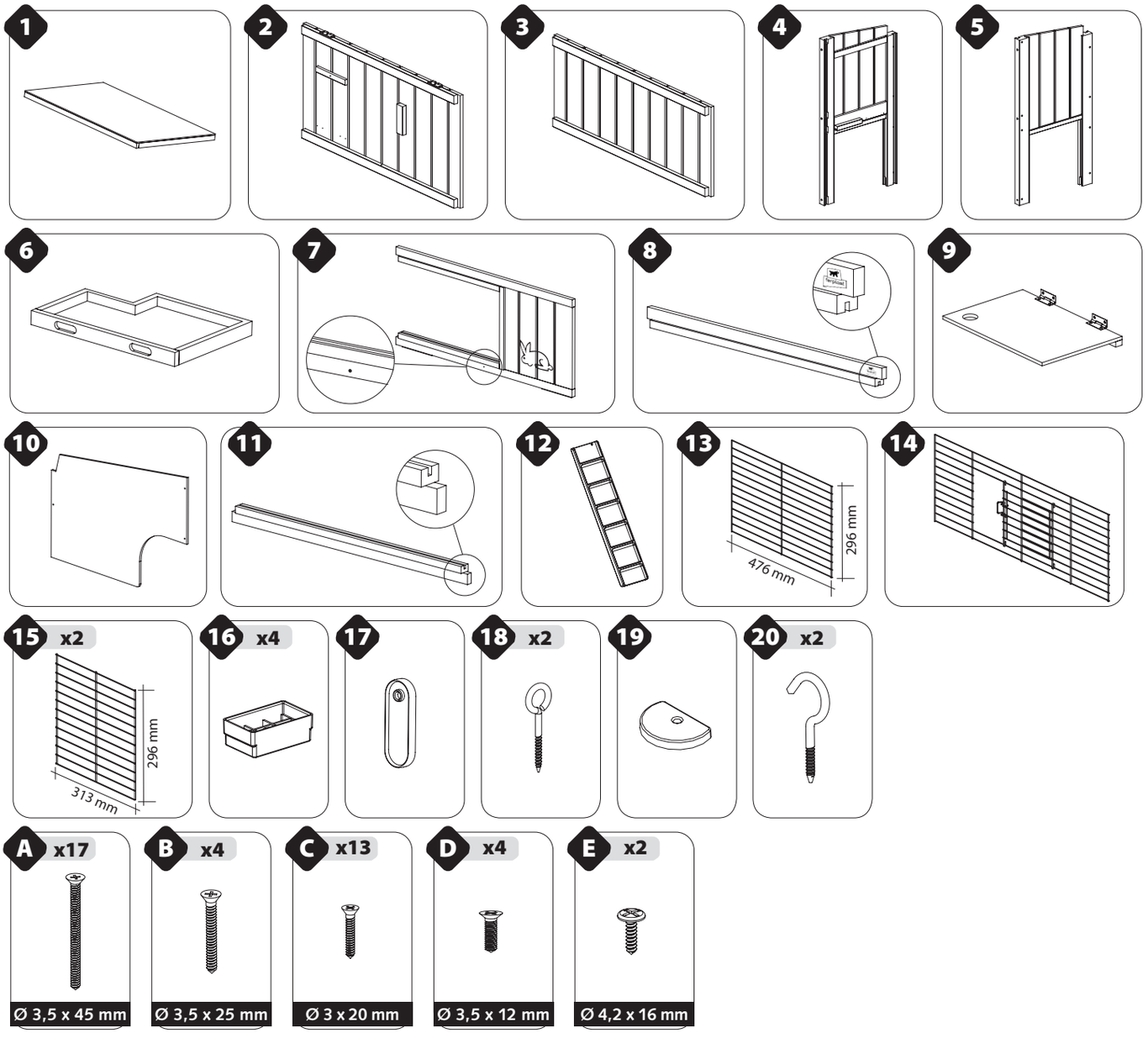

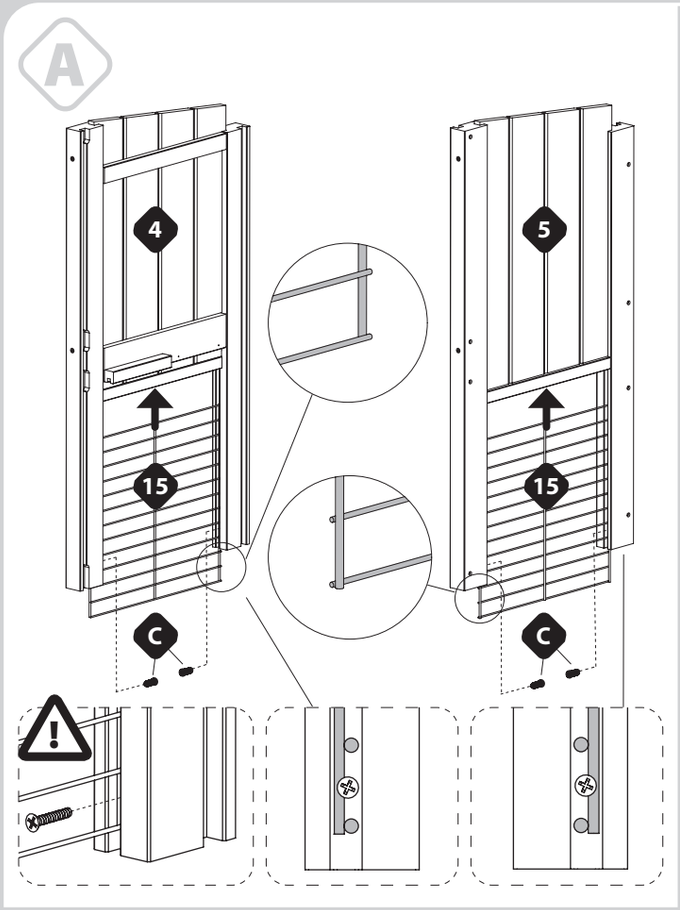
A
4
5
15
15
C
C

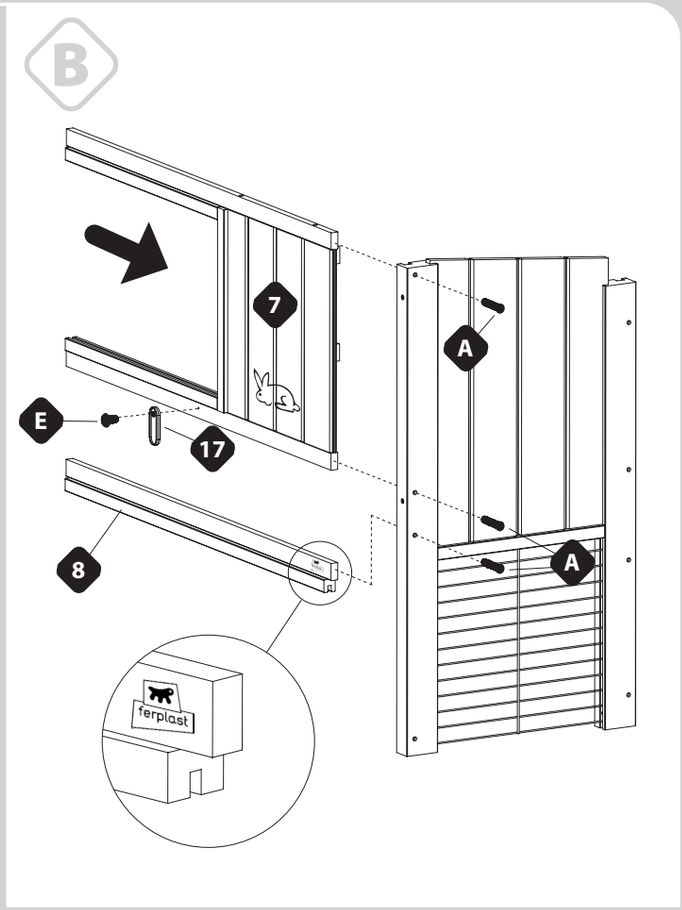
B
7
A
E
17
8
A
ferplast

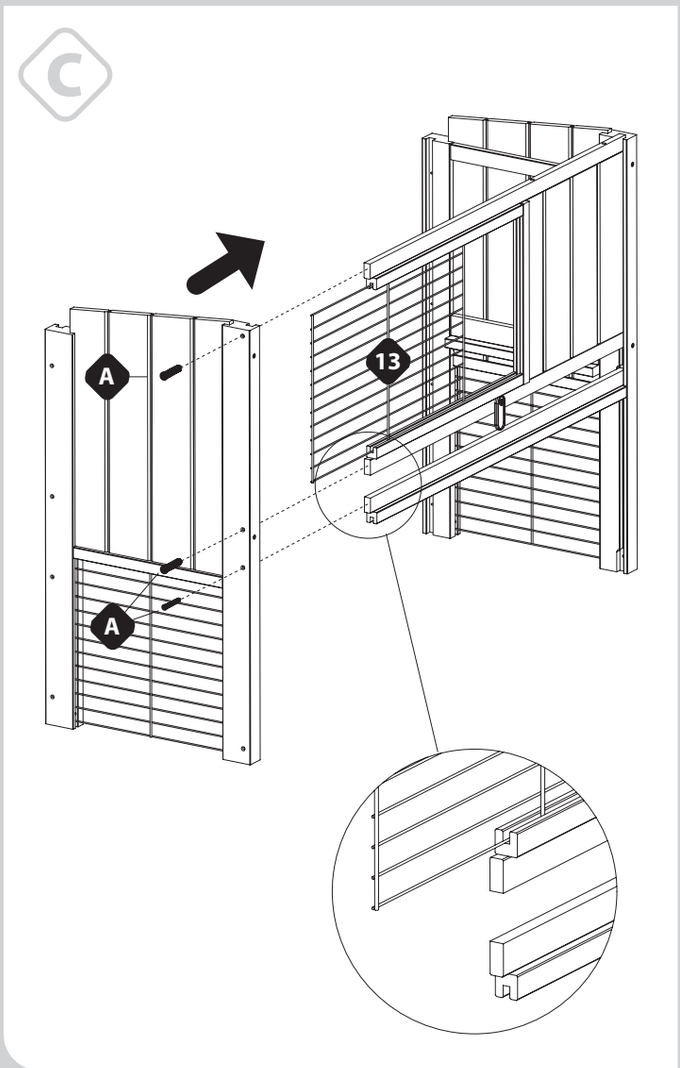
C
A
13
A

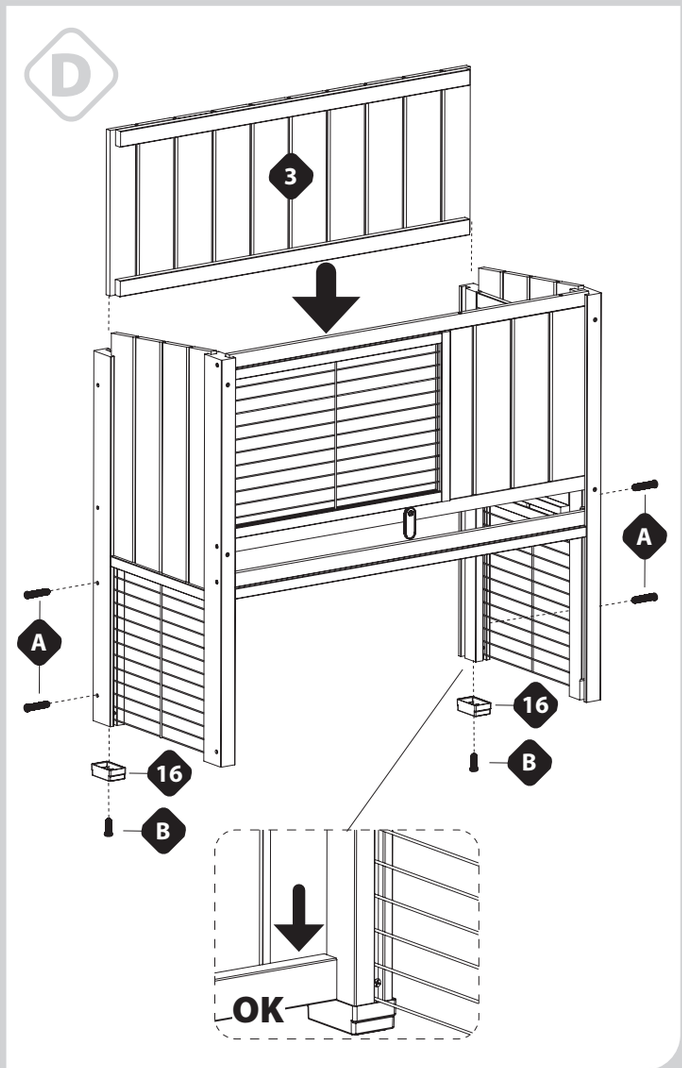
D
3
A
A
16
B
16
B
OK

E

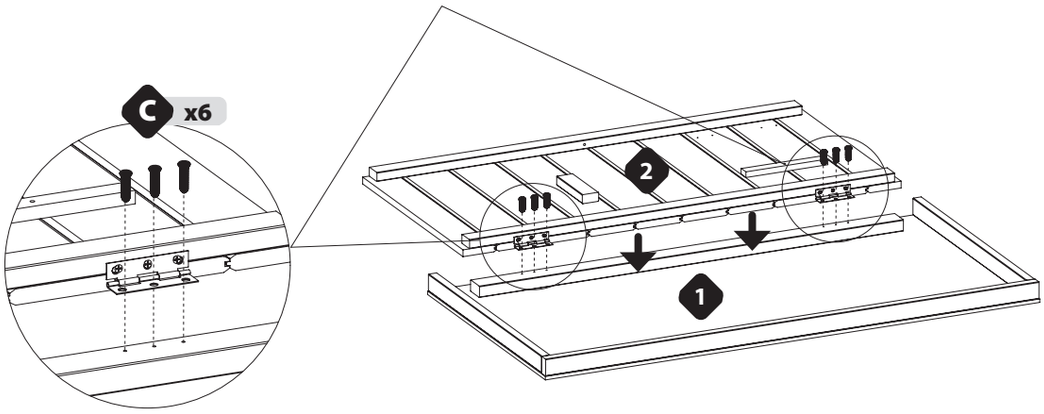

F

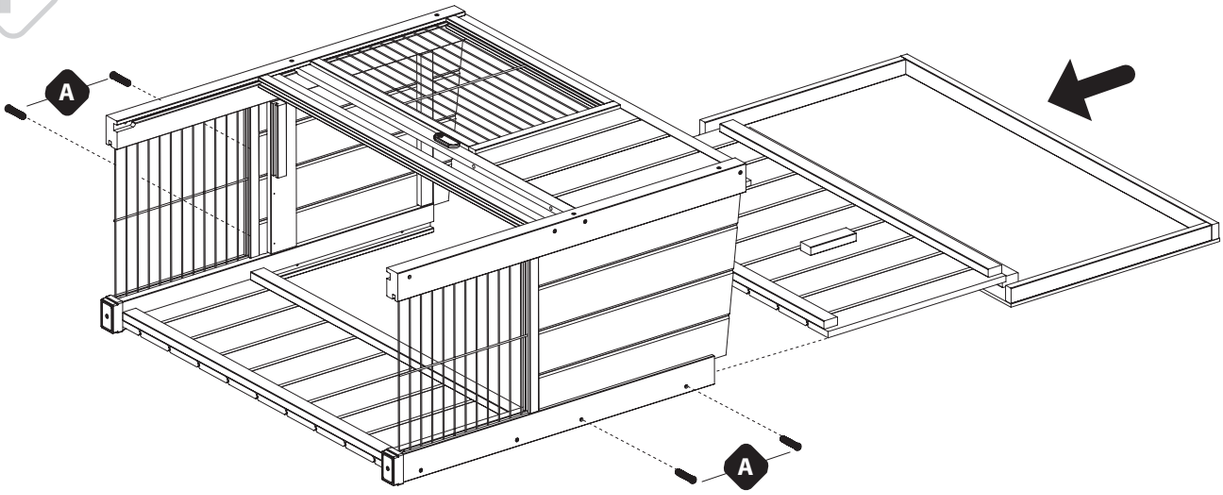

G

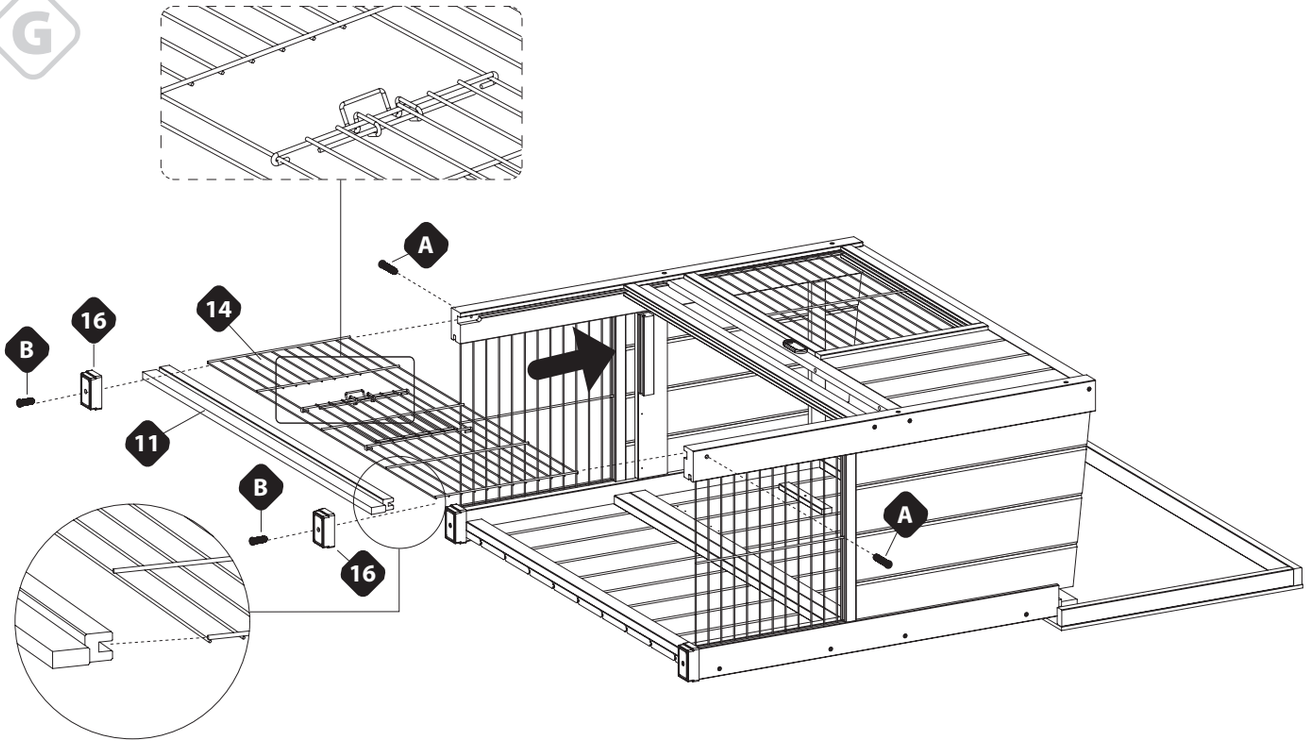

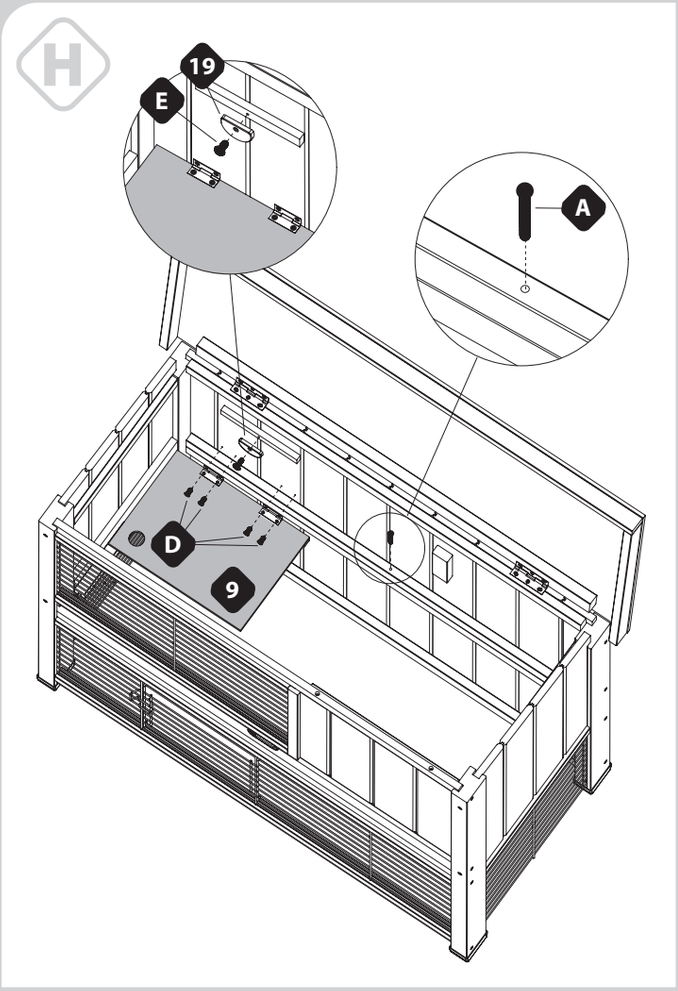

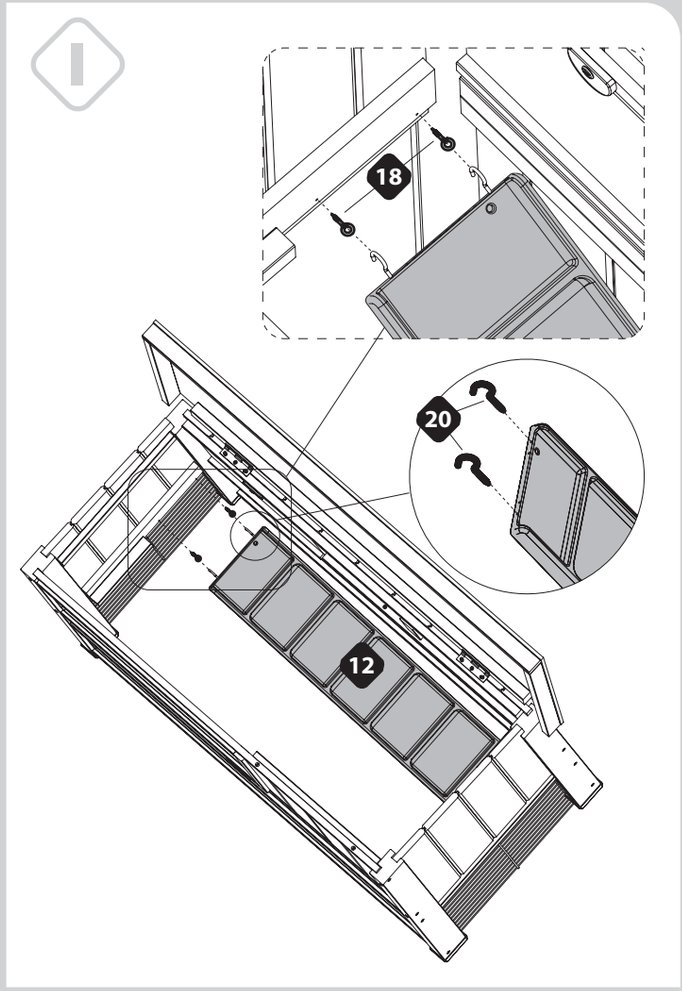

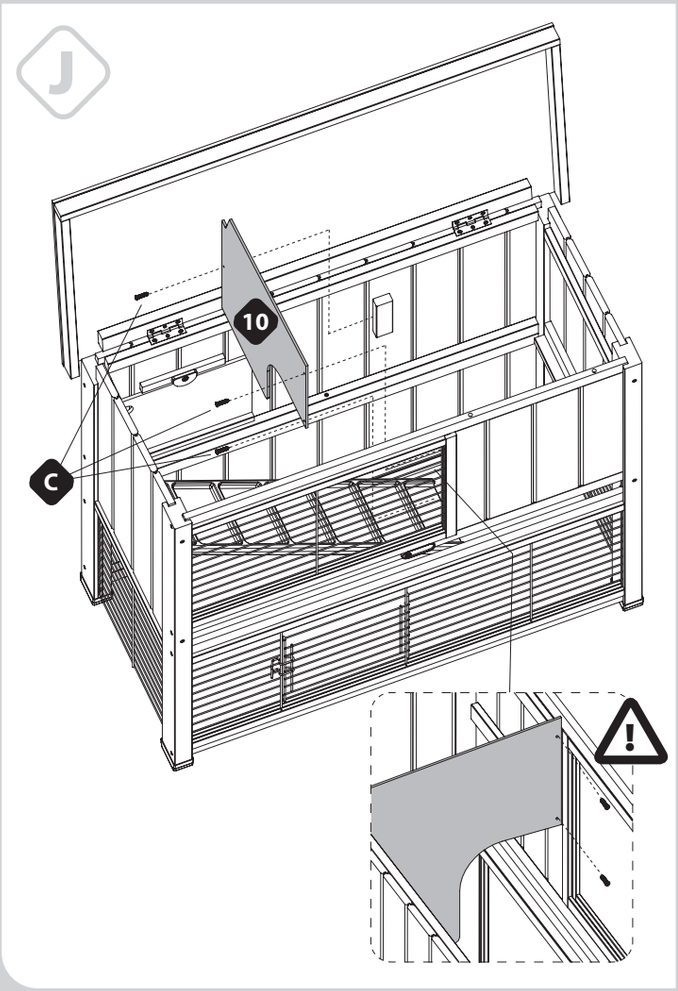

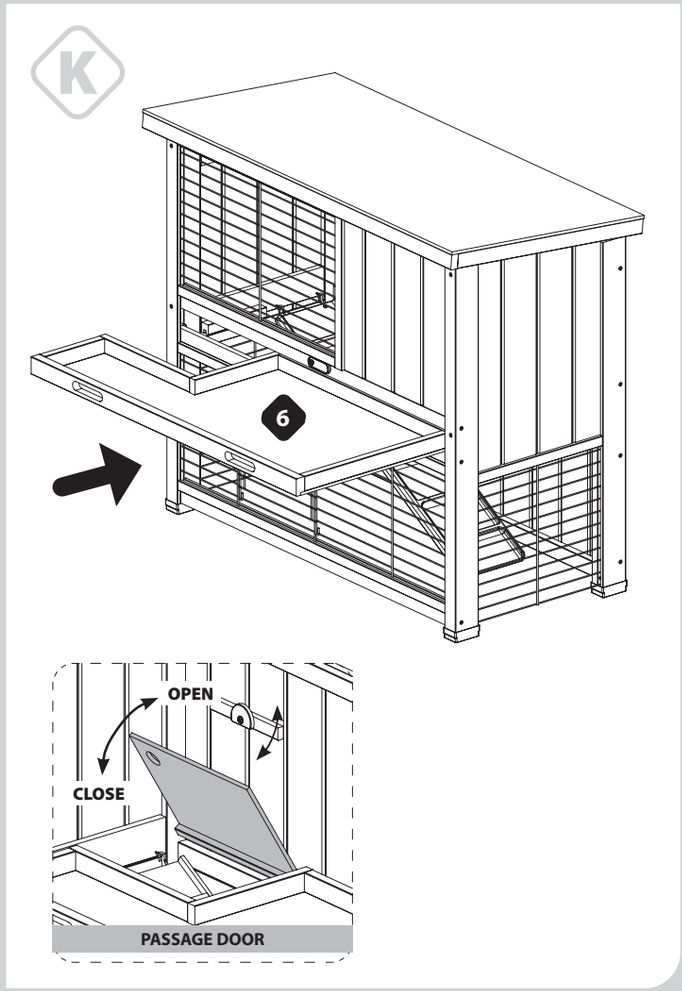

197197-3